Great Point Collection

Vitreous China Bath Undermount
Rectangular Sink in White or Bisque

model:

UM-18x12-W / UM-18x12-B

Nantucket SINKS

www.NantucketSinksUSA.com
info@nantucketsinksusa.com





SPECS

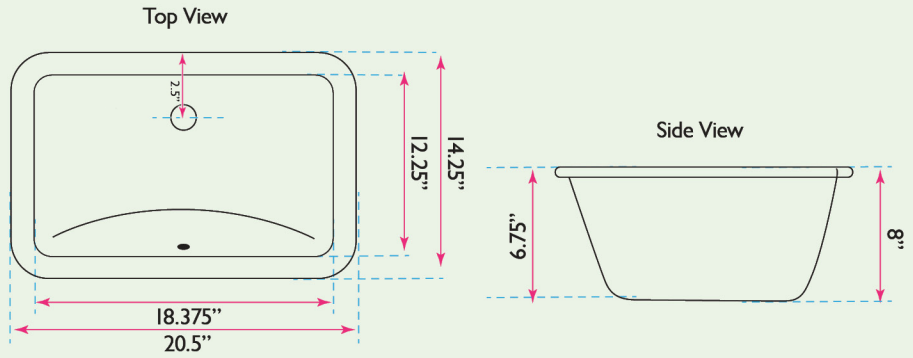

OVERALL DIMENSIONS	INTERIOR BOWL	BOWL DEPTH	DRAIN OPENING	OVERFLOW
20.5” x 14.25”	18.375” x 12.25” (top)	8”(ext.); 6.75”(int.)	1.75” Opening	Yes

FEATURES:

- Vitreous China undermount with porcelain enamel glaze; easy to clean
- With Overflow
- Limited lifetime manufacturer’s warranty
- 1.75” Standard drain not included
- Fits a 24” cabinet base minimum
- Nominal Dimensions - actual may vary by 1/4"
- Template and mounting clips included

Project Name: _____

Architect / Contractor:

Job Notes: _____

_____

_____