COLLECTION | PLYMOUTH
MODEL | PR3419-W-UM

Nantucket SINKS



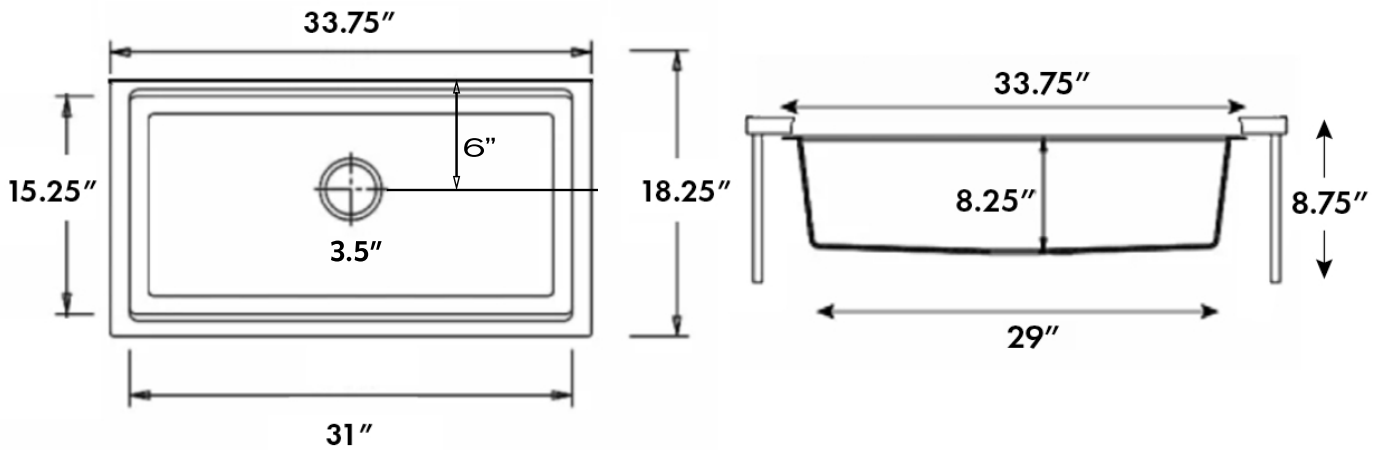

Overall Dimensions	Interior Bowl	Exterior Base	Interior Depth	Drain Dimensions
33.75″x18.25″x8.75″	**31″x15.25″x7.75″**	**29″x13.25″**	**8.25″**	**3.5″**

Features:

- Made in Italy
- High Quality 80% stone and 20% Acrylic Polymers composite in matte finish
- Scratch/Heat Resistant to 560°F
- Material is sound absorbing and stain-resistant
- Non-porous surface is hygienic and scratch resistant
- Limited lifetime manufacturer's warranty
- Professional Installation Recommended
- Accessories included: Cutting board, Colander, Roll-up Mat
- Roll-up Mat measures 17.5″ x 12.5″ (does not fit ledge)
- Drain is not included

Project Name: _____

Architect/Contractor: _____

Job Note: _____